Computerarkitektur

Classroom Practice plan for
Central Processing Unit 2

TOPICS COVERED

- Stages of a simple sequential processor (SEQ)
- Hardware structure of SEQ

SEQ STAGES

The problems ask you to examine the program counter and instruction code of some of the lines in the instruction sequence, and trace them.

The left rows in the sequence consist of 3 columns: program counter, instruction code and instruction. The last two describe the exact same thing in different ways: assembly code on the right, Y86-64 format instruction code on the left. The following figures aim to help understanding how this encoding is done exactly.

Program counter	Instruction code	Instruction
`0x000`	`30 f2 09 00 00 00 00 00 00 00`	`irmovq $9 %rdx`

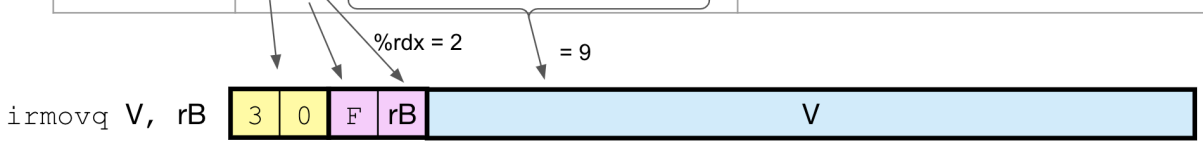

Number	Register Name
0	%rax
1	%rcx
2	%rdx
3	%rbx

First line: Set register *%rdx* to 9

Program counter	Instruction code	Instruction
0x000	30 f2 09 00 00 00 00 00 00 00	irmovq $9 %rdx
0x00a	30 f3 15 00 00 00 00 00 00 00	irmovq $21 %rbx

irmovq is a 10 byte long instruction, PC increased by 10

%rbx = 3

21 =0x15

irmovq V, rB

3	0	F	rB	V

Number	Register Name
0	%rax
1	%rcx
2	%rdx
3	%rbx

Second line: Set register *%rbx* to 21

Program counter	Instruction code	Instruction
0x000	30 f2 09 00 00 00 00 00 00 00	irmovq $9 %rdx
0x00a	30 f3 15 00 00 00 00 00 00 00	irmovq $21 %rbx
0x014	61 23	subq %rdx %rbx

PC increased by another 10

6x = OPq
61 = subq

2 = %rdx
3 = %rbx

Number	Register Name
0	%rax
1	%rcx
2	%rdx
3	%rbx

OPq rA, rB

6	fn	rA	rB

Third line: Subtract the value at *%rbx* from *%rdx*

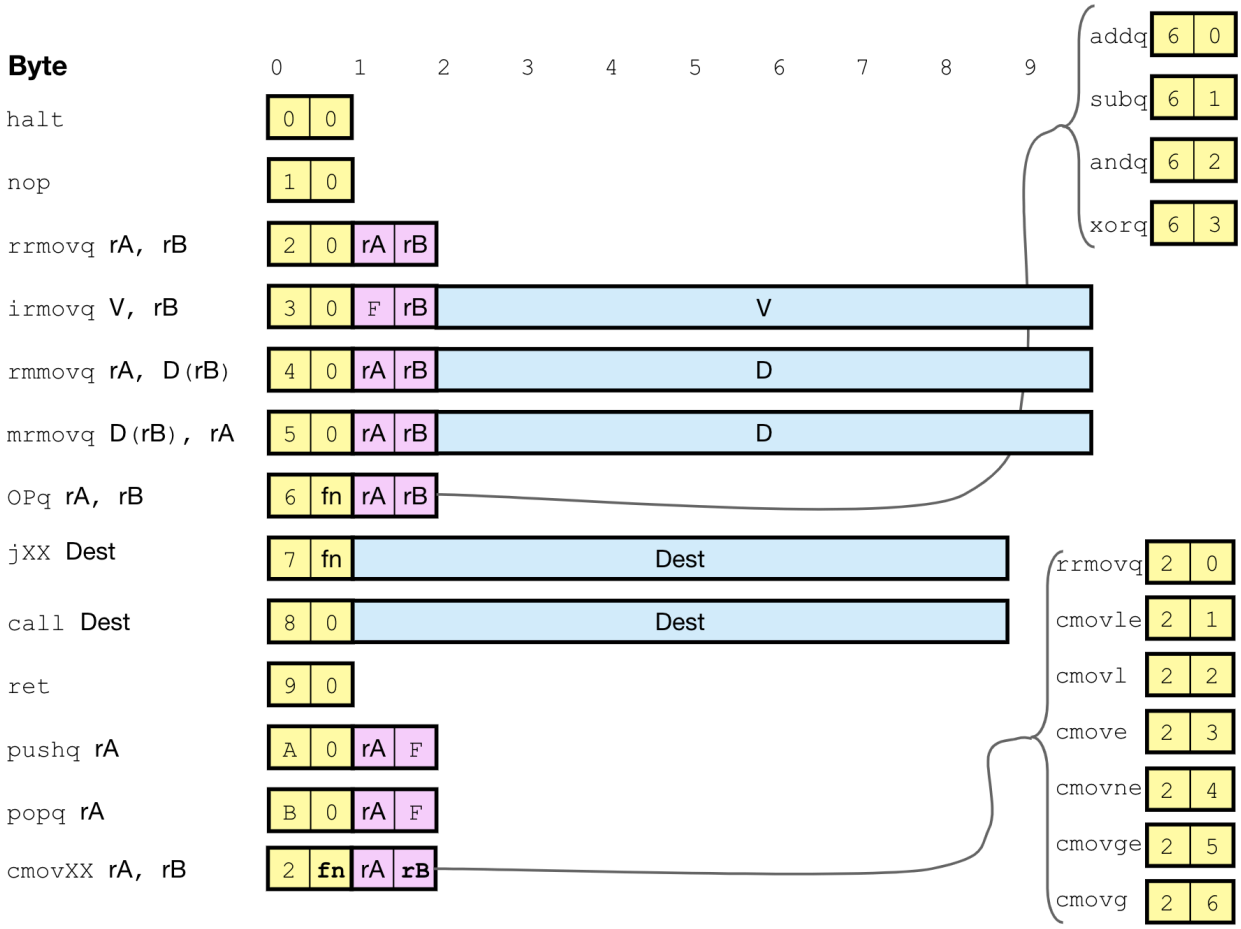

Instruction code of every Y86-64 instruction

Number	Register Name
0	%rax
1	%rcx
2	%rdx
3	%rbx
4	%rsp
5	%rbp
6	%rsi
7	%rdi

Number	Register Name
8	%r8
9	%r9
A	%r10
B	%r11
C	%r12
D	%r13
E	%r14
F	No register

Encoding value of each register

1. Solve practice problem 4.8 (Page 407)
2. Read the blue Aside box on page 424 to see how to substitute actual values.
3. Discuss and solve Practice Problem 4.13 (Page 423). Use the figures above to find the correct instruction codes and register numbers.
   Note that the problem description continues on the next page, under the blue Aside box.
4. Using the same technique, discuss and solve Practice Problems 4.14 and 4.18

HARDWARE STRUCTURE OF SEQ

In this section of the practice your task is to write Hardware Control Language (HCL) expressions for logic blocks of the sequential processor.

5. Check the names in Table 4.26 (page 440). You will use these labels when writing HCL
6. Read chapter 4.3.4 as a reminder to how SEQ stages work, and discuss how the example HCLs are constructed.
7. Discuss and solve Practice Problems 4.19, 4.20 and 4.21 together in your group
8. Solve problems 4.23, 4.24, 4.25 and 4.26 alone.
9. Compare your solutions within the group